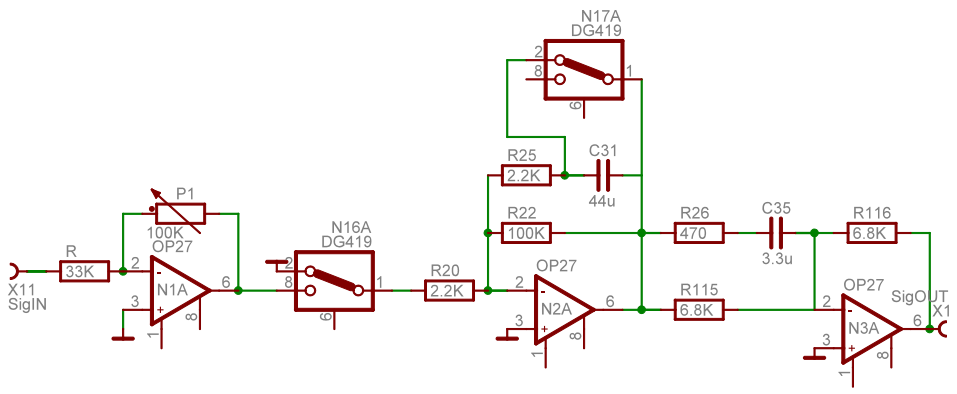

Created: Date	Name	TAMA project, NAO Mitaka, Tokyo, Japan
12/26/2004	Sa	Description: Middle Bnad Alignment Filter ETM module1 (Center)
Changed: Date	Name	
		File: MASC_ETM1 Saved: 2003/12/26 17:08:17
		Sheet: 1/1 Printed: 2003/12/28 17:20:09