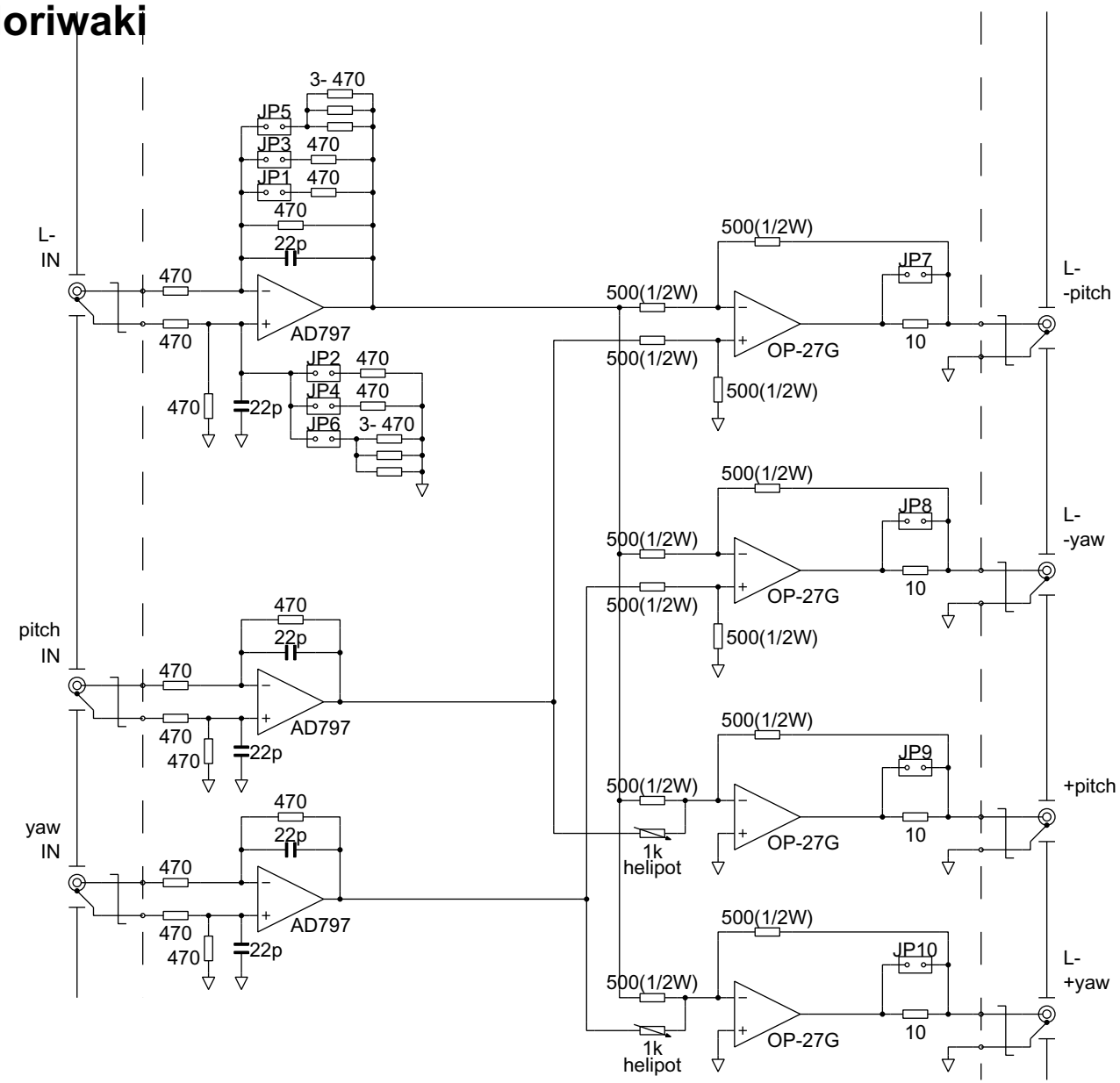Matrix for WE Front Coil drivers
2001/7/20
Designed by S. Moriwaki