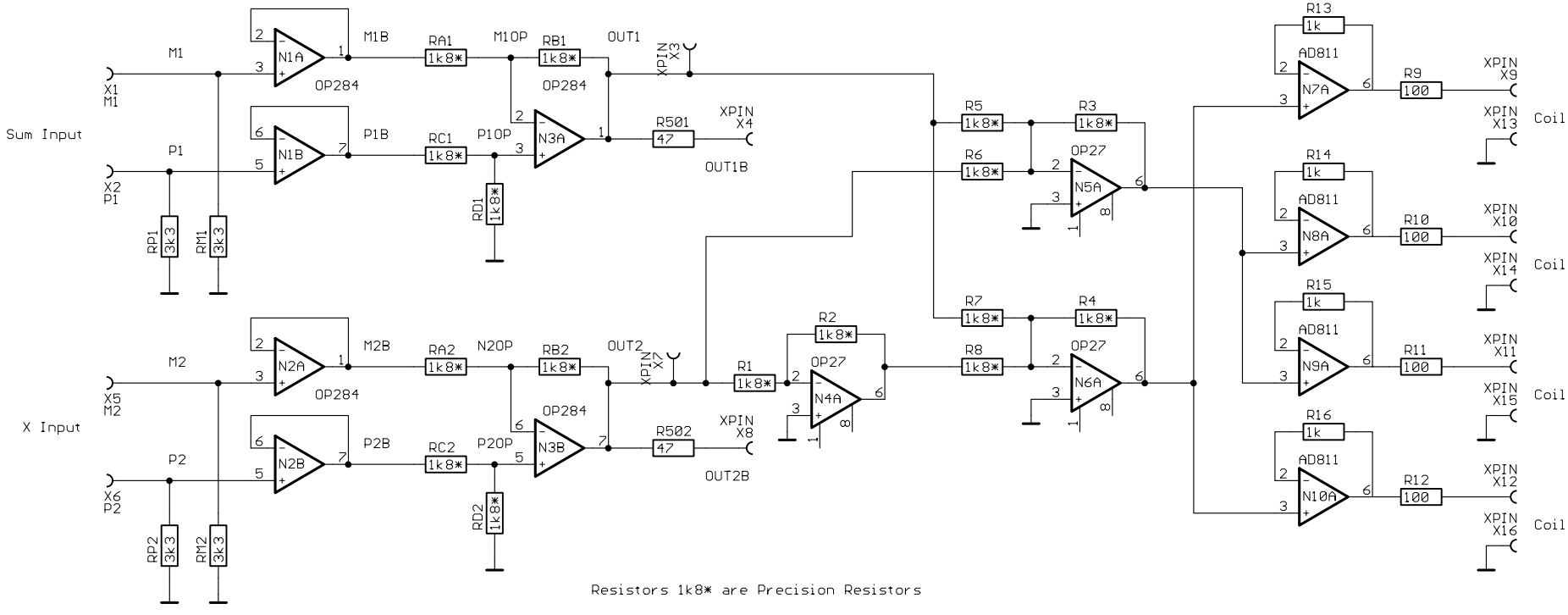

Resistors 1k8* are Precision Resistors

0.1%, 10 ppm/K

Input Resistors 3k3 or 33k ?

Coils :

1 2

4 3

Magnets are partially reversed

This curcuit does NOT take care of that

Created: Date	Name	TAMA project, NAO Mitaka, Tokyo, Japan
2001/01/25	GHH	Description: MC End Mirror Coil Driver Dual Differential Receiver
Changed: Date	Name	
		File: endcoil Sheet: 1/1
		Saved: 1/26/2001 18:32:08 Printed: 1/26/2001 18:32:28