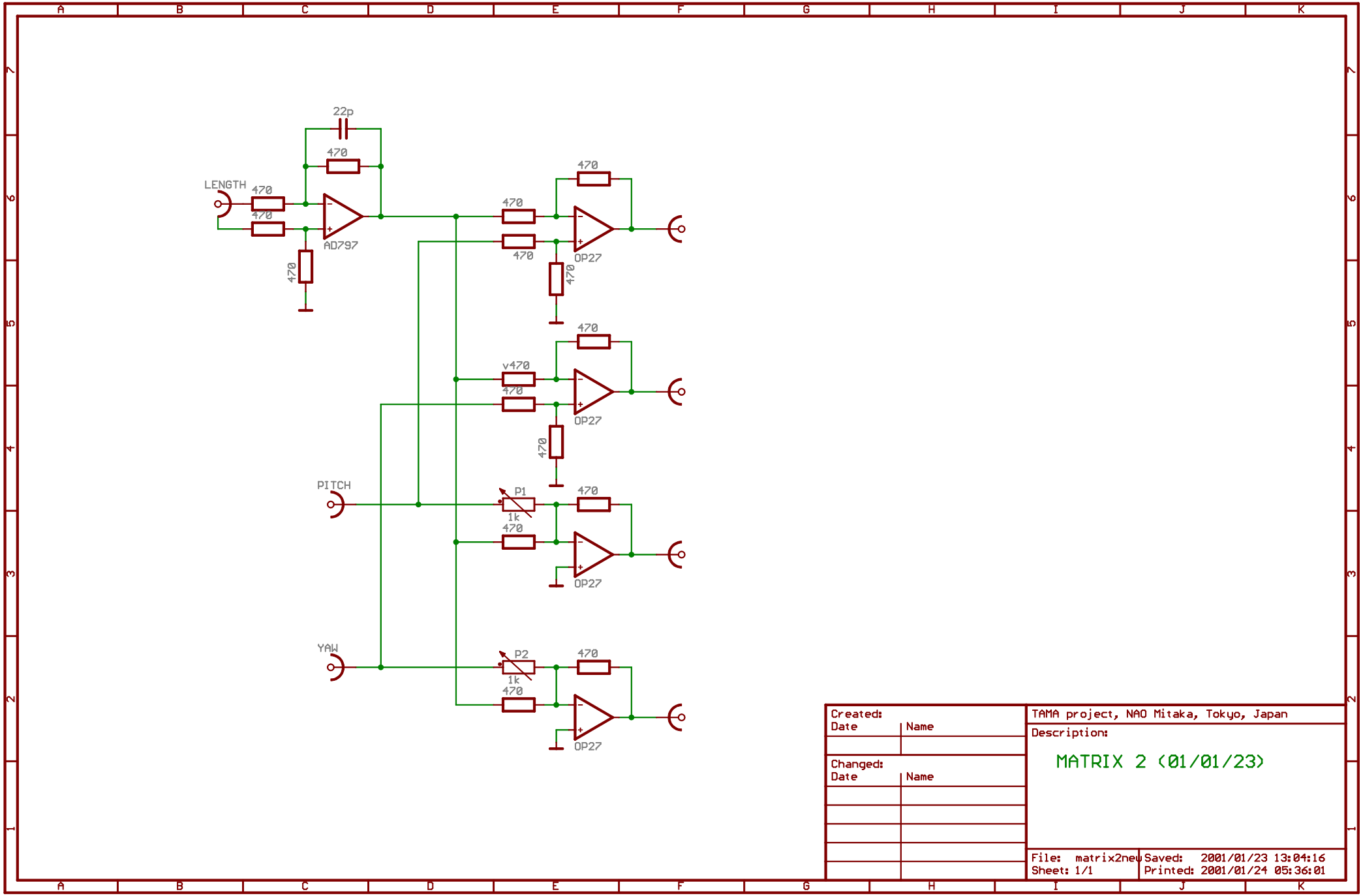
22p
470
LENGTH
470
470
AD797
470
470
470
470
470
OP27
470
v470
470
OP27
470
PITCH
P1
1k
470
470
OP27
YAW
P2
1k
470
470
OP27
Created:
Date
Name
Changed:
Date
Name
TAMA project, NAO Mitaka, Tokyo, Japan
Description:
MATRIX 2 (01/01/23)
File: matrix2new
Sheet: 1/1
Saved: 2001/01/23 13:04:16
Printed: 2001/01/24 05:36:01

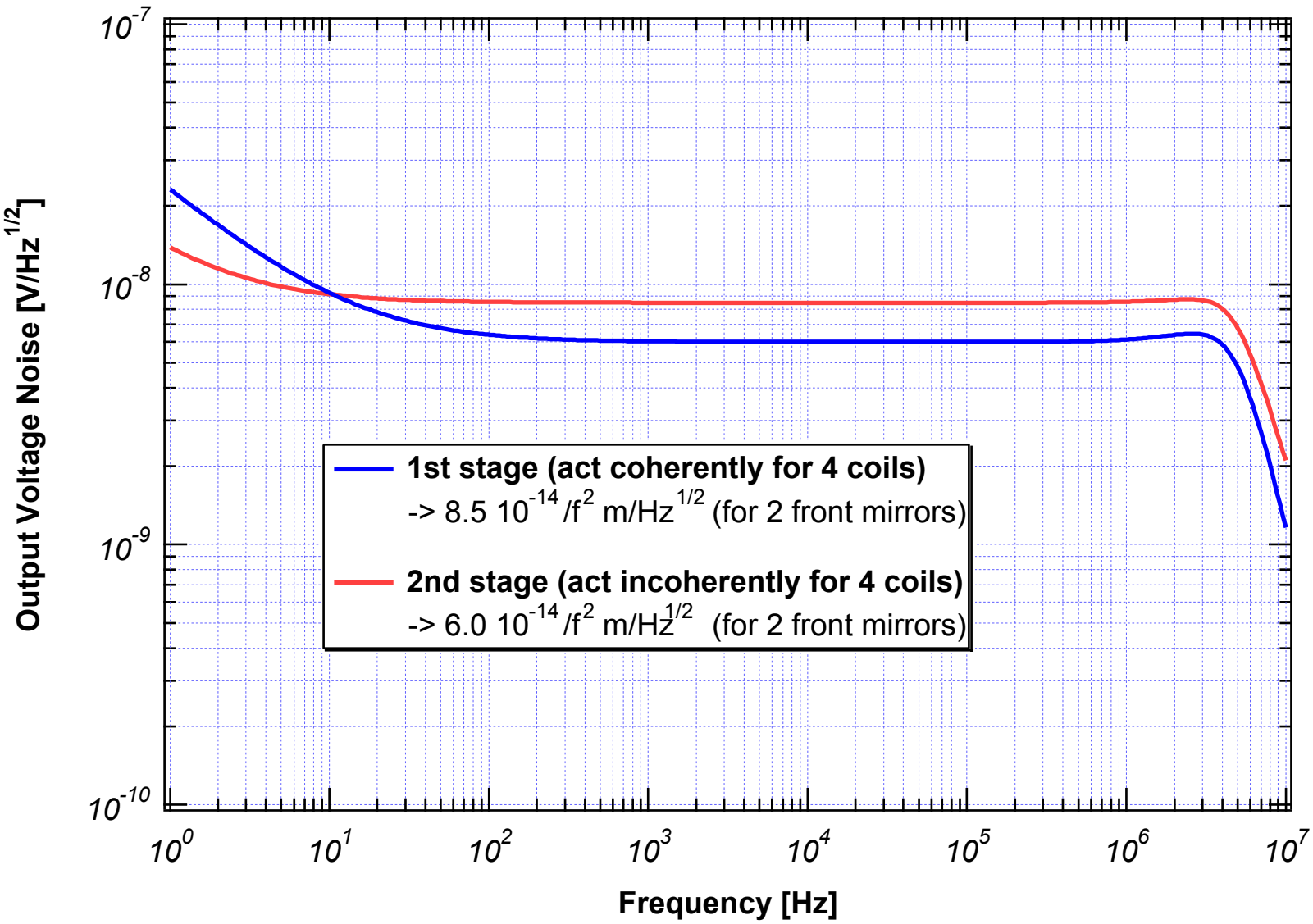
Output Voltage Noise [V/Hz^1/2]
10^-7
10^-8
10^-9
10^-10
10^0
10^1
10^2
10^3
10^4
10^5
10^6
10^7
Frequency [Hz]
1st stage (act coherently for 4 coils)
-> 8.5 10^-14 /f^2 m/Hz^1/2 (for 2 front mirrors)
2nd stage (act incoherently for 4 coils)
-> 6.0 10^-14 /f^2 m/Hz^1/2 (for 2 front mirrors)