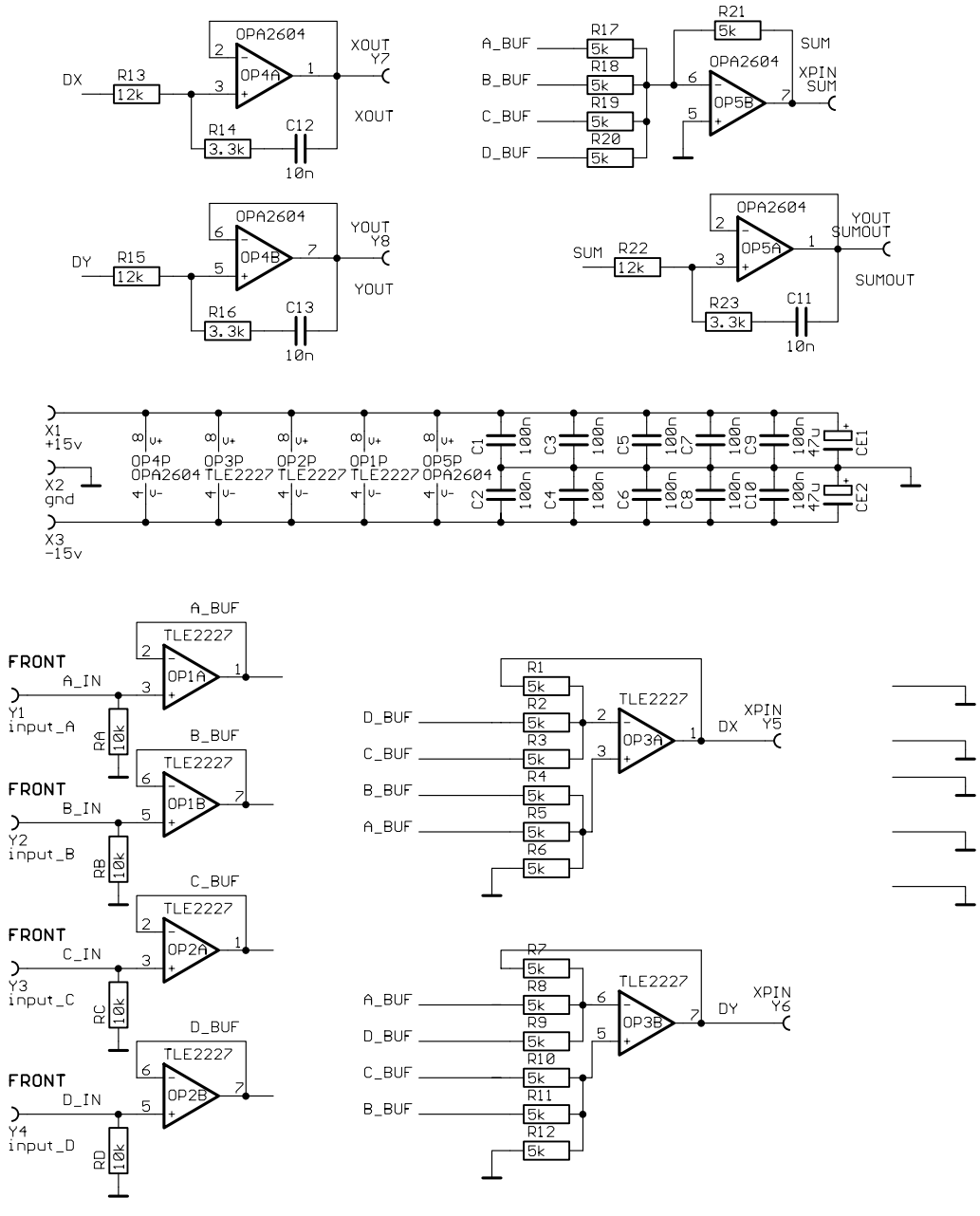

Created: Date	Name	TAMA project, NAO Mitaka, Tokyo, Japan
		Description:
Changed: Date	Name	
		File: diff Sheet: 1/1
		Saved: 1/24/2000 22:44:26 Printed: 1/25/2000 21:30:42