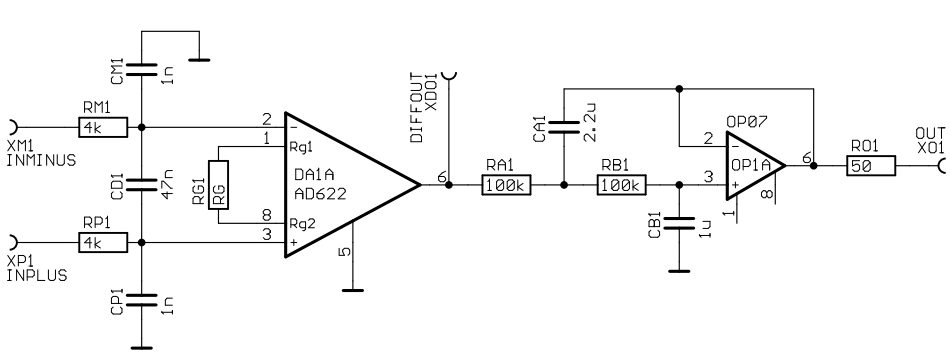

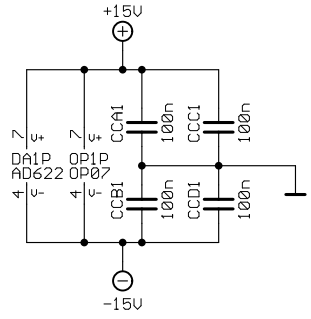

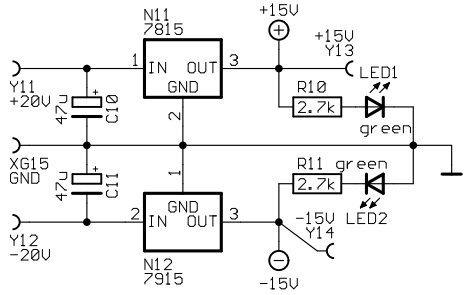

Created: Date	Name

Changed: Date	Name

TAMA project, NAO Mitaka, Tokyo, Japan

Description:

File: epics
Sheet: 1/1

Saved: 7/21/2000 17:08:41
Printed: 7/21/2000 18:31:41